CS300HD Spa Underguide System

Shown with Encapsulated Guide

All Corners Square

¾ inch overhang both sides of pool

A B

General Requirements
1. Pool must be true rectangle. (AB=CD, AC=BD, AD=BC)
2. Mechanism end bond beam and interior walls must be 1 inch lower.
3. Deck or coping around pool must not cantilever more than ¾ inch beyond Encapsulation.
4. Encapsulation will add 1 inch to pool elevation unless notching beam for encapsulation.
5. One 3 inch diameter drain from housing required. Adequate housing drainage required.

Excavation
1. Layout must be true rectangle and corners cut square.
2. Skimmers and other plumbing not deeper than housing may not be located on mechanism end bond beam.
3. For polymer housing dig 16" down and 24" back from pool. Dig 4' past waters edge on motor side and 2' on non motor side. For concrete housing dig 24" down and 24" back from pool. Dig 2' past waters edge on motor side and 1' on non motor side.
4. If drywell will be used for drainage, for convenience dig at this time. Dig hole 30 inches wide and 7 feet deep, 1 foot of stone in bottom. See drywell in this manual.

Cover Housing
1. Install housing or form for concrete housing after excavation but before steel and gunite. Refer to housing options for installation.
2. Stake housing or form in place. It should not move before and during gunite.
3. Motor end offset is 14" minimum and non motor side is 6" minimum from interior of pool walls.
4. Polymer housing is 14" wide and 14" deeper than side wall bond beam. If building concrete housing or framing opening in wood deck, build housing 12" to 14" wide and 14" deep.

Steel
1. All corners are square.
2. Steel mechanism end wall and interior spa walls 2 inches lower.
3. If cover housing is connected to gunite pool, steel around concrete form.

Plumbing
1. Avoid placing plumbing under housing. If required, plumbing and light conduits must be kept 18 inches lower than side wall elevation in housing area.
2. 3 inch drain required at motor end of housing. Non-motor end drain also is best. Keep drains tight to housing ends.
3. Set skimmer height for water level 3 inches below bond beam or below notch for encapsulation

Electrical
1. #8 solid bond wire with 3 foot tail at each end of housing. Wire must be bonded to equipment pad.
2. Motor under full load rated 8.6 AMP 120VAC. Use adequate wire size and follow required codes.
3. Wire to housing should terminate in all-weaather junction box. Standard system requires all wires to be sized for motor rating. Key switch carries full motor load. Circuit boards require wire for 5VDC run in conduit seperate from AC wiring.
4. Key switch requires single gang all weather junction box. It must be located where 100 % of pool surface is visable. If pool is outside switch should be outside also.

Gunite
1. Pool shell must be true rectangle. (AB=CD, AC=BD, AD=BC)
2. All corners are cut square.
3. Mechanism end bond beam is 1 inch lower between side bond beams or encapsulation notches.
4. Interior spa walls are at least 1 inch lower than side bond beams or encapsulation notch.
5. If matching width of coping and lid stones(12 or 14 inches), make top of bond beams 1" less than stone width for encapsulated guide and 3" less for srew on guide.

Cantilevered Edge
1. Cantilever edge cannot overhang more than ¾ beyond encapsulation, including edge treatments such as bullnose, roundover or rock facing.
2. If planning to match walk-on lid with coping, material should be 2 inches thick and/or have sufficient strength to span brackets 24 inches apart. Material selection and strength is responsibility of builder.
3. Cantilevered edge continues over lowered bond beam ending flush with inside of housing.

Tile
1. Tile top of lowered bond beam. The finished surface of the lowered bond beam must be at least ½ inch below bottom of encapsulation. Top may be flat or slope ½ inches down to pool.
2. Interior spa wall must finish at least ½ inch below bottom of encapsulation. There cannot be rough edges or sharp corners.

Cover Installation
1. Cover may be installed only after pool water is with in 6" of guides
2. In no case may cover be left over pool without water level in pool at final elevation.

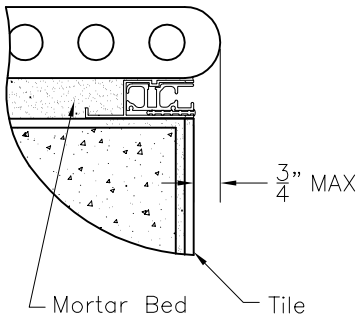

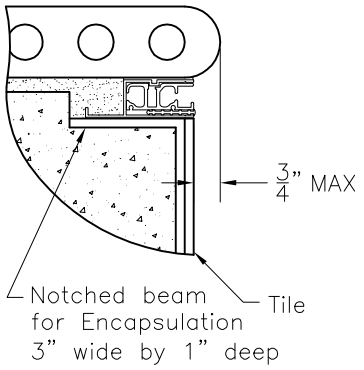

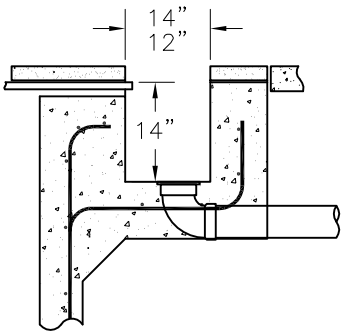

Because coping and deck thickness vary, housing depth are always measured from the top of beam or top of encapsulation.

14"

12" 6"Min

Lowered Bond Beam

1" Lower

12"

C D

Minimum 3" DIA Drain Required

12"–14"

CS300 Maximum pool size is 12'x24'
Housing is 14" Deep

Motor End

Non–Motor End

X

Bond Wire

Bond Wire

Electrical: Spa units require all weather junction box

To determine motor side, stand behind cover housing facing opposite end of pool